AVR -- CM030

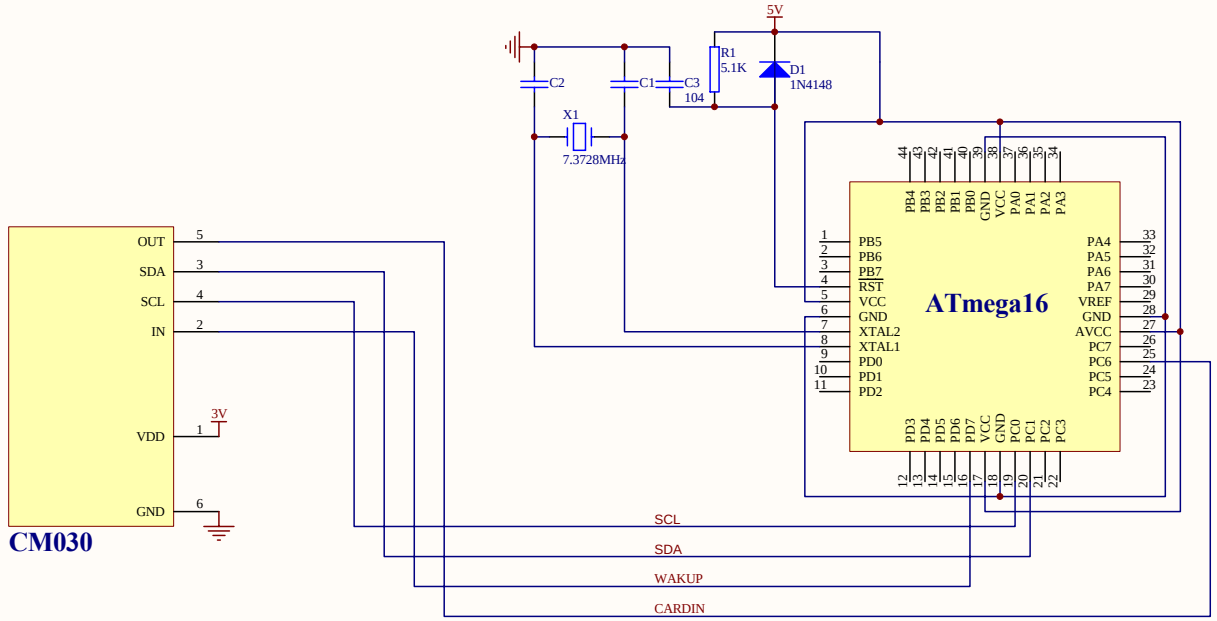
5V
R1
5.1K
D1
1N4148
C2
C1
C3
104
X1
7.3728MHz
ATmega16
PB5
PB6
PB7
RST
VCC
GND
XTAL2
XTAL1
PD0
PD1
PD2
PD3
PD4
PD5
PD6
PD7
PA4
PA5
PA6
PA7
VREF
AVCC
PC7
PC6
PC5
PC4
PC0
PC1
PC2
PC3
PA0
PA1
PA2
PA3
OUT
SDA
SCL
IN
VDD
GND
3V
CM030
SCL
SDA
WAKUP
CARDIN